# MODEL 505-12L/505-12A POWER SUPPLY

## *WIRING DIAGRAM*

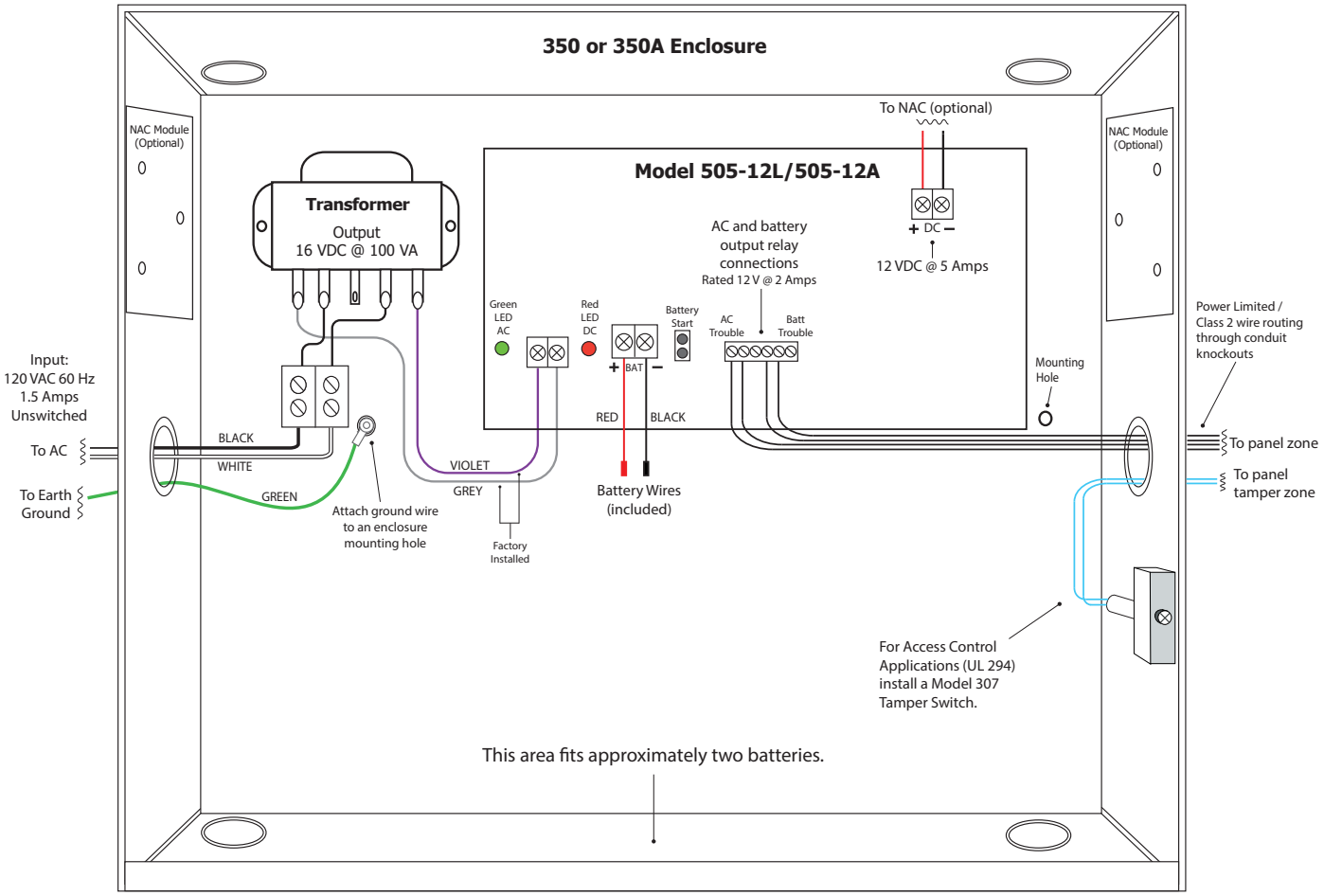


| Output Current | | | | | | | | |
|---|---|---|---|---|---|---|---|---|
| **Input Voltage** | **Input Voltage Type** | **Output Voltage** | **Output Voltage Type** | **Normal Standby** | **Standby Battery Min Operating Time** | **Maximum (Alarm)** | **Standby Battery Operating Time** | **Ripple Voltage** |
| 120 VAC | Alternating Current | 12 VDC | Direct Current | 1.25 Amps | 24 Hours | 5.0 Amps | 5 Minutes | 350 mV |

Refer to the 505 Series Power Supply Installation Guide (LT-0453) for complete descriptions of wiring connections, battery installation, and NAC Module information.

For UL Listed Fire Protective Signaling Systems, use only with XR150/XR550 Series panels. For special applications, refer to the specific panel installation guide for a list of compatible fire notification appliances.

### Specifications

12 VDC Power Supply 5 Amp Maximum
For UL 603 and UL 294 10.76-12.36 VDC at 1.25 Amps normal standby and 5 Amps alarm

**Note:** Not intended to provide power for sounding devices in UL 609 Local Burglar System

### Secondary Power Supply

1.5 Amps maximum charge current. Use only 12 VDC batteries. Replace every 3-5 years.

### Power Limited

All circuits in the Model 505 comply with the requirements for inherent power limitation and are Class 2 with exception of the red battery wire.

### NFPA

This equipment should be installed in accordance with the Standard Fire-Protective Signaling Service (National Fire Protection Association, Batterymarch Park, Quincy MA 02269)

### Certifications

UL 1481 Power Supplies for Fire Protective Signaling Systems
UL 603 Power Supplies for Burglary Alarm Systems
UL 294 Power Supplies for Access Control System Units

LT-0849 1.02 23062 © 2019 Digital Monitoring Products, Inc.